DHD

TorcUp™

DIRECT ADAPTATION

TU/SQ DIRECT HEX DRIVE

DHD

DIRECT HEX DRIVE ADAPTOR

DELIVERING THE TORQUE

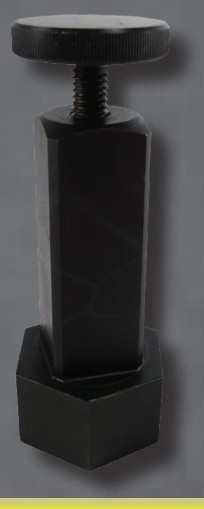

TORCUP'S DIRECT HEX DRIVE ADAPTOR EASILY SWITCHES YOUR STANDARD SOCKET-TURNING TU AND SQ SQUARE DRIVE HYDRAULIC WRENCH INTO AN INTERNAL HEX FASTENER TOOL - AND BACK AGAIN IN SECONDS. SAME TOOL. SAME ACCURACY. SAME DURABILITY. SAME RELIABILITY.

SPECIFICATIONS

MODEL #	TYPE	DRIVE LENGTH (IN/MM)	SQUARE SIZE (IN/MM)	SPLINE OD (IN/MM)
TU-2 / SQ-1	SQUARE	2.10/53.3	0.75/19.1	N/A
TU-3 / SQ-3	SQUARE	2.70/68.6	1.00/25.4	N/A
TU-5 / SQ-5	SPLINE	2.86/72.6	N/A	1.54/39.1
TU-7	SQUARE	3.67/93.2	1.50/38.1	N/A
TU-11 / SQ-10	SQUARE	4.01/101.9	1.50/38.1	N/A
TU-20	SPLINE	4.59/116.6	N/A	2.33/59.2
TU-27	SPLINE	5.09/129.3	N/A	2.58/65.5
TU-60	SPLINE	6.26/159.0	N/A	3.25/82.6

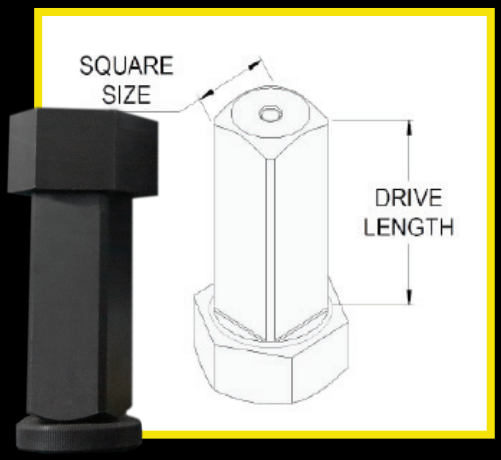

NOTE: ANY STANDARD OR METRIC HEX SIZE CAN BE ACCOMMODATED WITH THE DIRECT HEX DRIVES.

TOLL FREE: 1-888-TORCUP-1 | FAX: 1-610-250-2700
TELEPHONE: 1-610-250-5800 | EMAIL: SALES@TORCUP.COM

TorcUP Inc. 1025 Conroy Place Easton, PA. 18040 USA | www.torcup.com

TorcUP products are subject to continual development and TorcUP reserves the right to make changes to the specifications and design of their products without prior notice. All rights are reserved. Reproduction in whole or in part without permission of TorcUP Inc. is prohibited.